Royal Elm Designer Table U-7200C
Assembly Instructions

Contents of Carton:

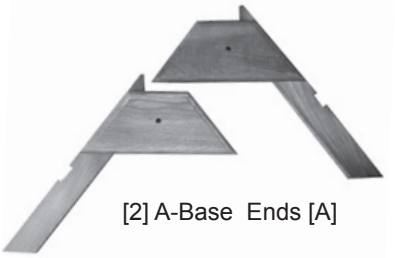

[2] A-Base Ends [A]

[2] Left & Right Legs for A-Base [B]

[2] A-Base Cross Supports [C]

[2] Chanelled Side Supports [D]

[1] Upper Cross ESupport [E]

[1] Chanelled Cross Member with Threaded Rod [F]

[2] Drawing Top Braces [G]

IMPORTANT
If you have difficulty assembling your U-7200C Royal Elm or need customer service assistance.
Please call: Martin Universal Design, Inc.
Customer Service Hot Line at
1-313-895-0700. If you need additional parts, it is not necessary to contact your dealer, our Customer Service Rep. will forward them to you immediately.

Contents of Parts Bag:

[1] Threaded Lever [AA]

[1] Large Washer for Lever [BB]

[1] Female Knob [CC]

[2] Male Knob [DD]

[1] Washer for Female Knob [EE]

[2] Female Knobs with bolt & washer included [FF]

[2] Large Pin with hole [EE]

[2] “C” Washers for Large Pins [FF]

[12] Long Wood Screws [GG]

[2] 1-3/4” Bolts [HH]

[4] Small Wood Screws [II]

[2] Metal Tilt Adjustment Rods [JJ]

[2] Metal Pin End Caps for Tilt Rods [KK]

MARTIN Universal Design, Inc.
4444 Lawton Avenue, Detroit, MI 48208 USA • Tel:(313)895-0700/Fax:(313)895-0709
Email: Custservmud@aol.com • visit us at www.MartinUniversalDesign.com

Created July 06 - RPI

Assembly Instructions:

STEP 1] Assembling A-Base(s)

Take the A-Base end [A] as shown below and the Left Leg [B] for the A-Base.

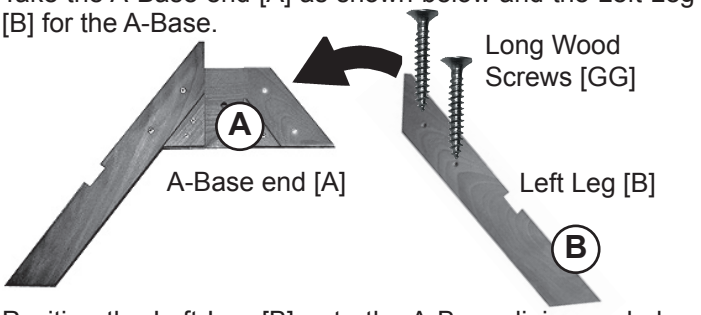

Position the Left Leg [B] onto the A-Base, lining up holes. Secure with [2] Long Wood Screws. Tighten. See below for proper assembly.

Repeat with other side.
Now, you should have [2] complete A-Base Assemblies.

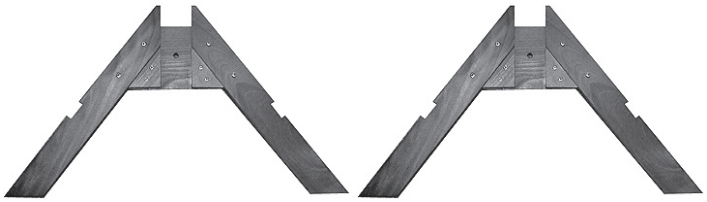

STEP 2] Attaching A-Base Supports

Take one assembled A-Base end and attach [1] support bar (with Logo reading up in correct position) and place into notch and secure with [1] long wood screw [GG]. See below for proper assembly.

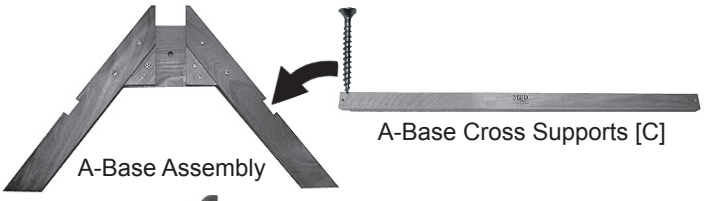

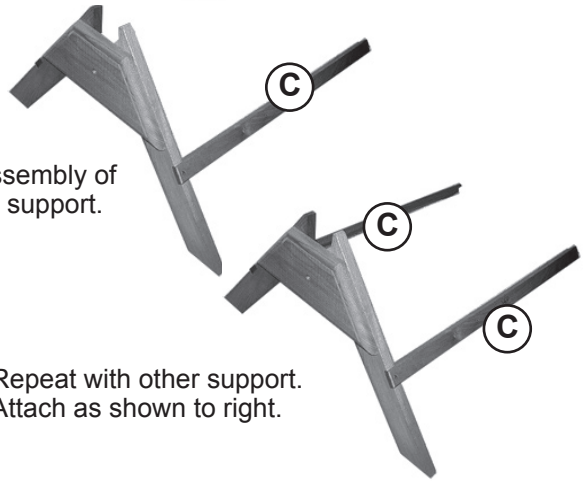

Proper assembly of A-Base & support.

Repeat with other support.
Attach as shown to right.

STEP 3] Attaching Channelled Side

Take A-Base end that has the two supports attached and place on flat surface. Position Channelled Side Support [D] into middle section of A-Base. Making sure channel is on bottom end. As shown below.

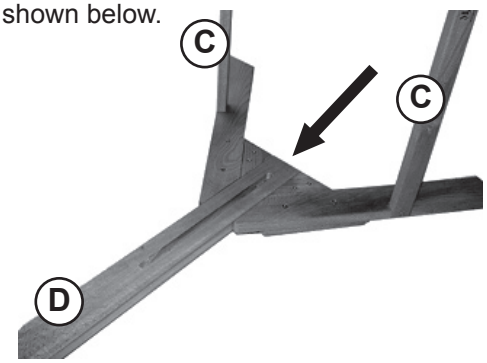

STEP 4] Adding Lower Support & Rod

With above assembly still laying flat on surface, insert one end of Channeled Cross Member with Threaded Rod [F] into Channelled Side Support [D] making sure rod end goes through other end of A-base assembly. Secure with Washer [EE] and Female Knob [CC]

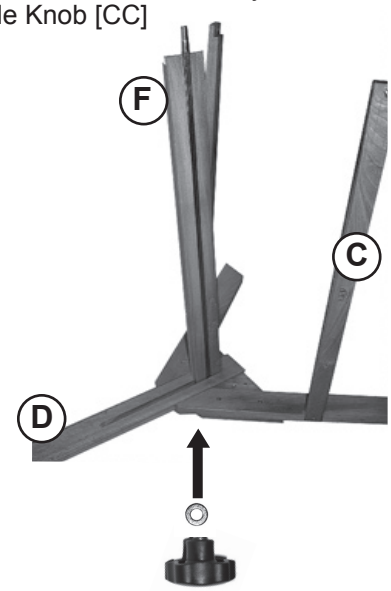

After securing with washer [EE] and Female Knob [CC], turn assembly up onto base as shown below.

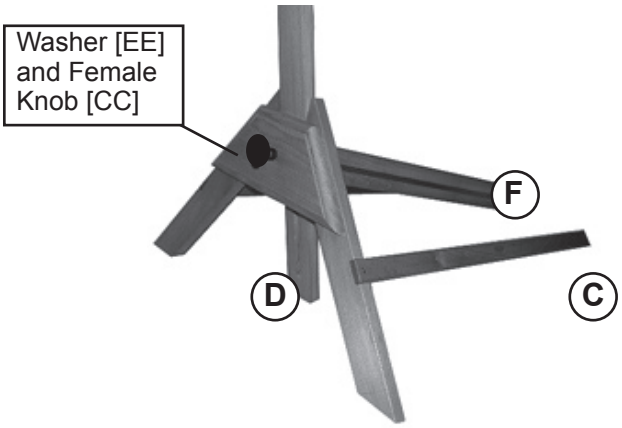

Created July 06 - RPI

Assembly Instructions continued:

STEP 5] Securing Lower Support & Rod

Repeat with other A-Base assembly on other side.
First by sliding Channelled Side Support [D] down into A-Base assembly, then continue by inserting Lower Support & Rod [F] into Channel in Side Support [D] making sure threaded rod goes all the way through A-Base assembly, this time securing with large washer [BB] and Lever [AA].
See photos below.

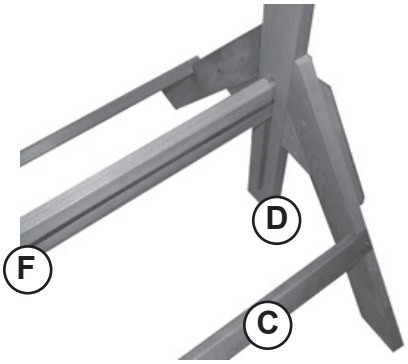

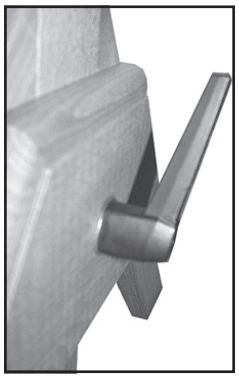

Close-up photo of Lever and large Washer.

STEP 6] Attaching Upper Cross Support

Take Upper Cross Support [E] and insert one end into small slot in upper portion of the Channelled Side Support [D]. Secure with 1-3/4" Bolt [HH]. Tighten with Phillips Screwdriver. Insert other end into other side of Channelled Side Support [D]. Secure with other 1-3/4" Bolt [HH]. PLEASE NOTE: You may have to loosen Lever to allow Side Support to pull away enough to allow end of Upper Cross Support [E] to be inserted into slot. Retighten Lever once completing Step 6.

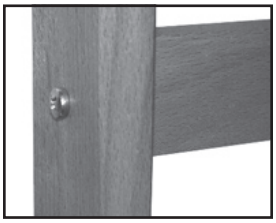

Close-up photo of 1-3/4" Bolt attachment.

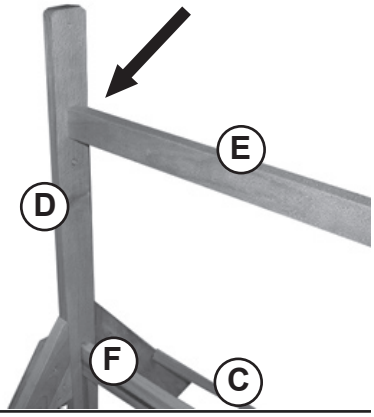

After Steps 1 - 6.
Base should look like photo to right.

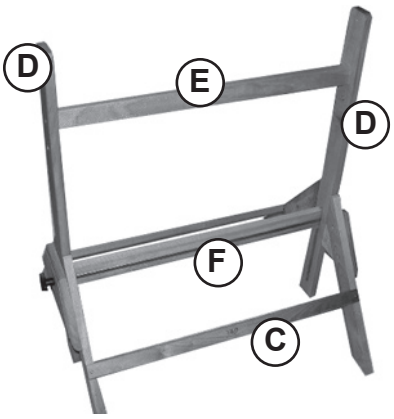

STEP 7] Inserting Pin into Side Support

Take the [2] Large Pins with Hole [EE] and insert each one into the hole which is below cross support bolt. Insert pin through inside of base and through other side as shown below. Secure pin [EE] with "C" Washer by sliding "C" washer over and onto Pin slot which is located right where Pin and Side Support meet. PLEASE NOTE: This is difficult to accomplish. You must use a flat screwdriver to push "C" washer into slot.

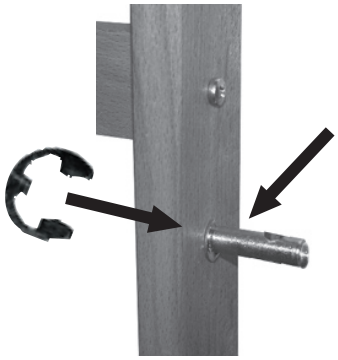

STEP 8] Attaching Tilt Adjustment Rods

Take [1] of the Metal Tilt Adjustment Rods [JJ] and insert it into the hole in the Pin [EE]. Secure with Metal Pin End Cap [KK]. Repeat with other side.

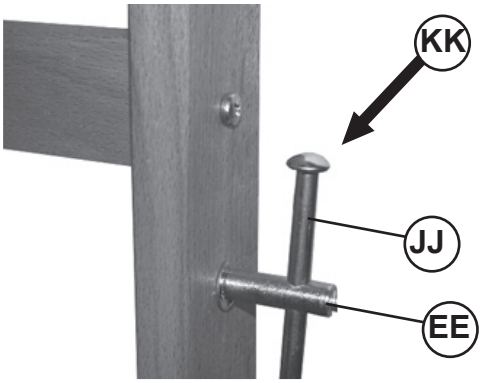

STEP 9] Securing Tilt Adjustment Rods

Take [1] Male Knob [DD] and attach to Pin end. Screw in to tighten. Repeat with other Adjustment Rod.

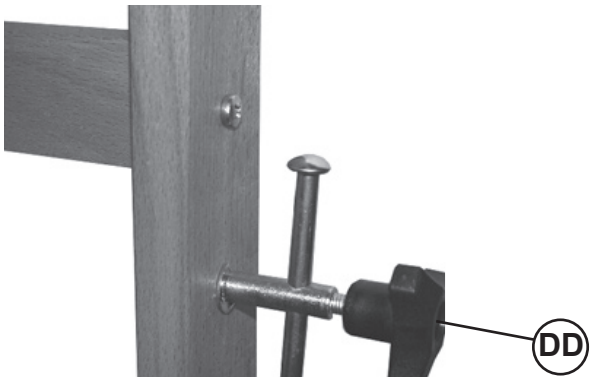

Created July 06 - RPI

Assembly Instructions continued:

STEP 10] Attaching Top Braces

When attaching the [2] Drawing Top Braces [G], position the drawing board brace in the position shown here:

Attach to the inside of the Side Support [D] using the [2] remaining knobs, washers and bolts [F]. Insert bolt through hole on inside of Drawing top Brace, making sure bolt goes through side support [D]. Finish by attaching washer and then female knob.

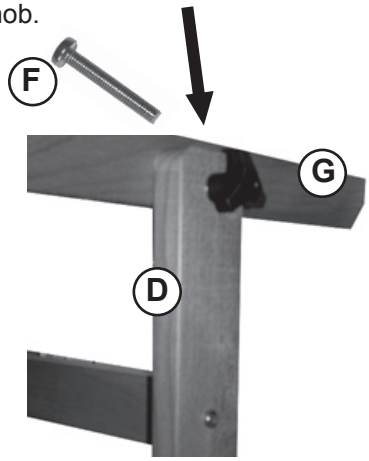

PLEASE NOTE:
Correct attachment of Drawing Top Braces will have large holes on Drawing Top Brace facing downward.

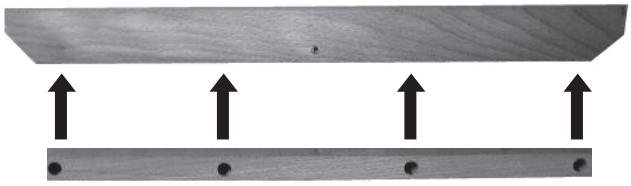

STEP 11] Turning Base over

PLEASE NOTE: BEFORE TURNING BASE OVER ONTO DRAWING BOARD: MAKE SURE DRAWING BOARD BRACES ARE IN A HORIZONTAL POSITION AND KNOBS ARE TIGHTENED.

Use two people with this next step. Lay top on carpeted flat surface. Carefully turn completed base assembly up and over and place on top of bottom side of drawing board.

PLEASE NOTE: Both sides of Drawing board can be the bottom side. Choose best looking for Top Side.

STEP 12] Attaching Base to Drawing Top

Base should look and be positioned to Drawing Board as pictured below.

Before securing base of table to Drawing Board top, you must center the base to the top.

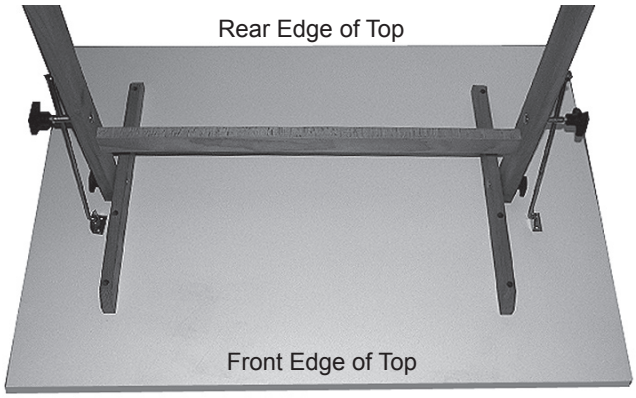

Center base by measuring 7” in [Measurement Y] from outside edges of Drawing Board to outside edge of Base Braces and 5-1/8” in from front edge of drawing board to front edge of Base Brace and 5-1/8” in from rear edge of drawing board to rear edge of base Brace. See illustration below. Secure using [4] Long Wood Screws [GG] per Base brace.

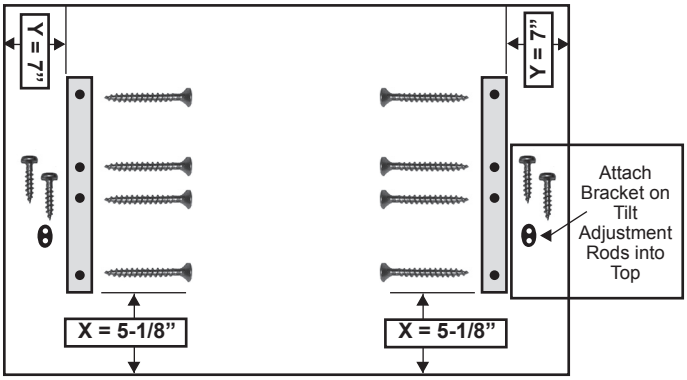

STEP 13] Attaching Tilt Adjustment Rods to Drawing Board

Attach metal tilting brackets to top using [2] each small wood screws [II] per bracket as shown above. PLEASE NOTE: Break Table Top Surface by making a small hole in top surface where screw will go in with hammer and a nail.

STEP 14] Table Top Tilt Adjustments

To make your table top tilt: Loosen the [2] black knobs (with tilt rods through them), proceed by holding onto the front edge of the top. Tilt top until desired position is reached. Tighten [2] black plastic knobs.

STEP 15] Table Height Adjustment

To adjust the height of your table, loosen the lever slightly. **PLEASE NOTE: When loosening the lever, the table will want to lower because of the weight of the top. Carefully, loosen lever and support table top with hands and lower or raise until desired height. Re-tighten Lever to secure. This adjustment is safest with another adult helping.**

MARTIN Universal Design, Inc.
4444 Lawton Avenue, Detroit, MI 48208 USA • Tel:(313)895-0700/Fax:(313)895-0709
Email: Custservmud@aol.com • visit us at www.MartinUniversalDesign.com

Created July 06 - RPI