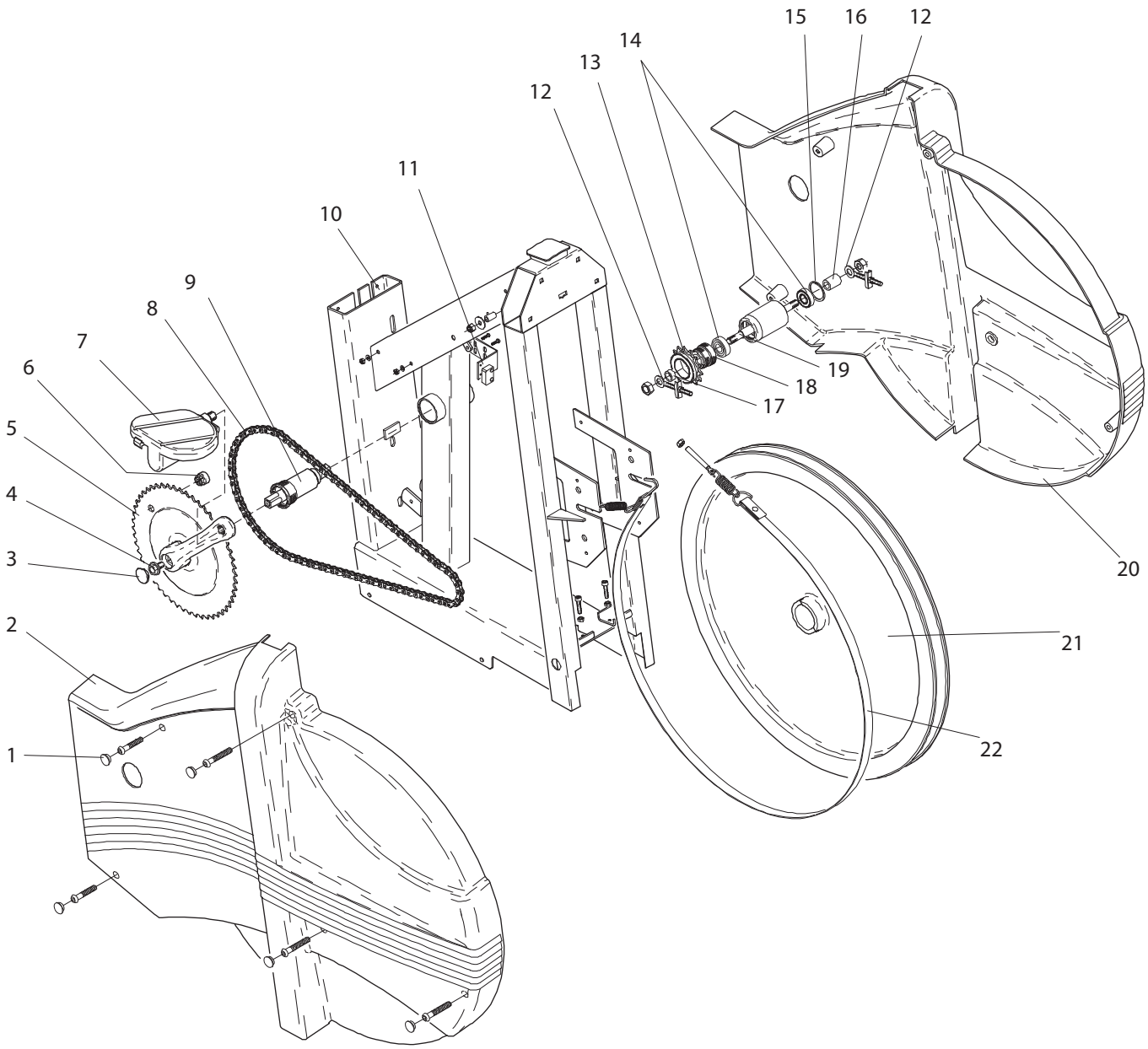

Part no.	Qty.	Pict.	Description	Part no.	Qty.	Pict.	Description
9306-12	10	1	Plastic cup	9000-17	1	17	Spacer
9337-51	1	2	Frame cover, right	9106-14	1	18	Connection
8523-2	2	3	Dust cover	9300-18	1	19	Axle
8523-115	2	4	Screw	9337-52	1	20	Frame cover, left
9300-401	1	5	Crank set complete	9300-3	1	21	Flywheel complete
9326-164	1	6	Magnet	9337-35	1	22	Brake belt complete
9300-220	1	7	Pedal 9/16", pair				
9300-207	1		Footstraps, pair				
1079-88	1	8	Chain				
8966-177	1	9	BB cartridge bearing				
9337-3	1	10	Frame, front				
9326-166	1	11	Sensor holder				
9326-162	1		Sensor				
9000-12	2	12	Chain adjuster, pair				
9106-13	1	13	Sprocket, 14 t				
19001-6	1	14	Ball bearing 6001-2Z				
9000-15	2	15	Lock ring SgH 23				
9300-17	1	16	Bush				

© Monark Exercise AB, Varberg

MONARK EXERCISE AB	Cardio Comfort Model 837E	04.09

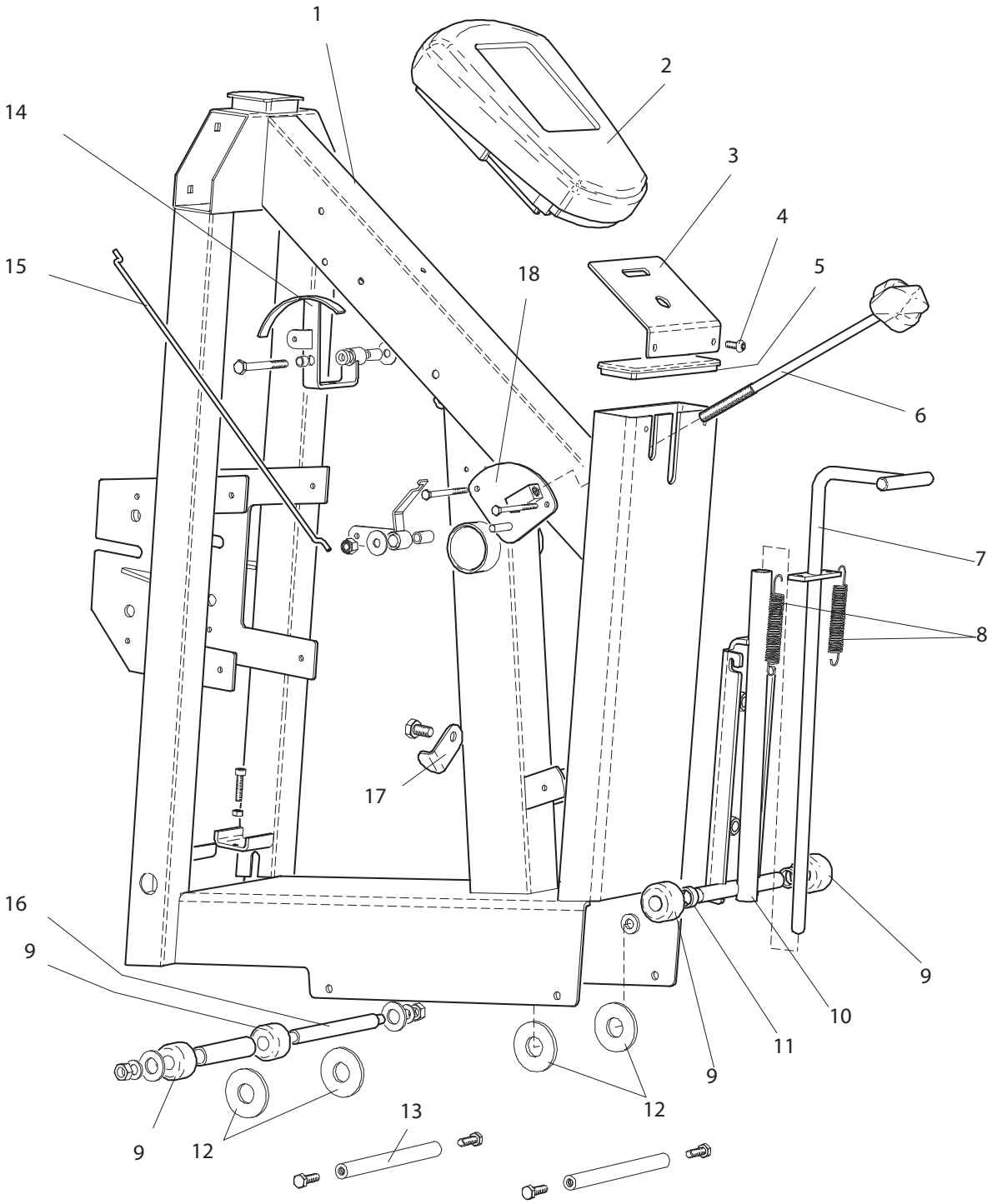

Part no.	Qty.	Pict.	Description	Part no.	Qty.	Pict.	Description
9337-3	1	1	Frame	9337-16	4	12	Washer
9337-180	1	2	Digitalmätare	9337-24	2	13	Axle
9337-7	1	3	Holder for Digiatmeter	9337-31	1	14	Tension lever complete
9300-12	2	4	Screw, M8x16	9337-12	1	15	Stay
9337-22	1	5	Plastic cap	9337-23	1	16	Axle
9300-25	1	6	Locking screw, complete	9337-36	1	17	Washer
9337-130	1	7	Lever	9306-27	1	18	Tension plate
9100-20	2	8	Spring	9337-550	1		Decalset
9337-15	4	9	Bearing	9337-150	1		Screw, washer and nut set
9337-4	1	10	Holder				
9010-102	2	11	Self-locking cap				

© Monark Exercise AB, Varberg

MONARK EXERCISE AB	Cardio Comfort Model 837E	04.09

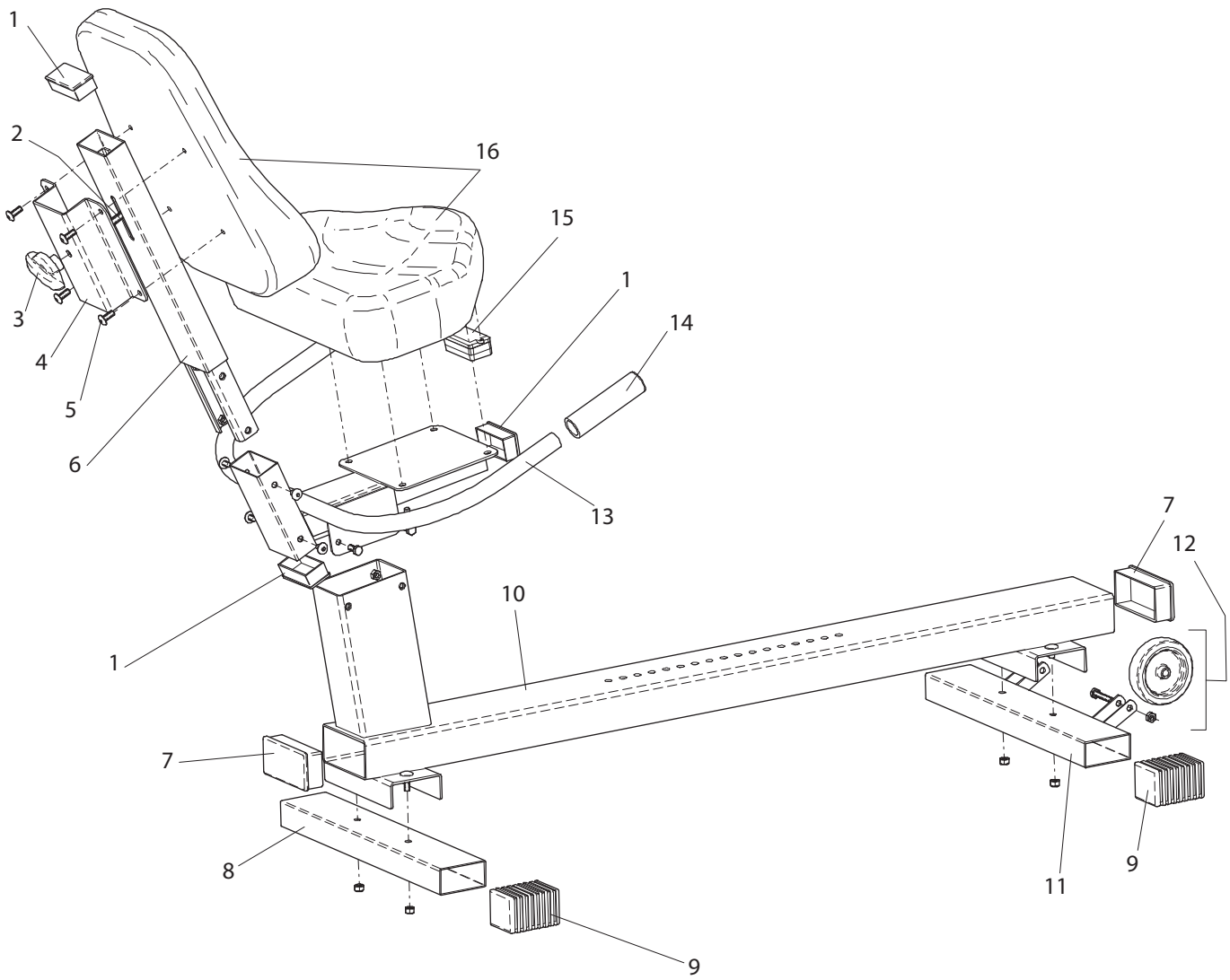

Part no.	Qty.	Pict.	Description	Part no.	Qty.	Pict.	Description
9300-10	3	1	Plastic cap	9300-7	4	9	Plastic cap, blue
9337-8	1	2	Lock washer	9337-5	1	10	Frame, rear
9337-122	1	3	Locking screw	9300-5	1	11	Support tube, front
9337-6	1	4	Backsupport	9000-29	2	12	Transport wheel, complete
9337-38	1	5	Screw	9337-1	1	13	Hand holder
9337-2	1	6	Saddle post	9337-181	2	14	Sensor handle
9337-21	2	7	Plastic cap	9337-182	1	15	Pulse transmitter
9300-6	1	8	Support tube, rear	4997-5	1	16	Saddle

© Monark Exercise AB, Varberg